Published: 11-May-2011

Handles, Locks, Latches and Entry Systems -

Torque Specifications

Description	Nm	lb-ft
Hood latch release handle bolt	5	3.7
Liftgate latch actuator bolts	10	7
Liftgate latch Torx screws	10	7
Liftgate striker bolts	25	18
Taligate latch striker bolts	25	18
Tailgate latch Torx screws	25	18
Front door latch Torx screws	10	7
Rear door latch Torx screws	10	7

mcx30.com

Published: 11-May-2011

Handles, Locks, Latches and Entry Systems - Handles, Locks, Latches and Entry Systems

Description and Operation

Passive Entry - Antenna and Keyless Vehicle Module Location

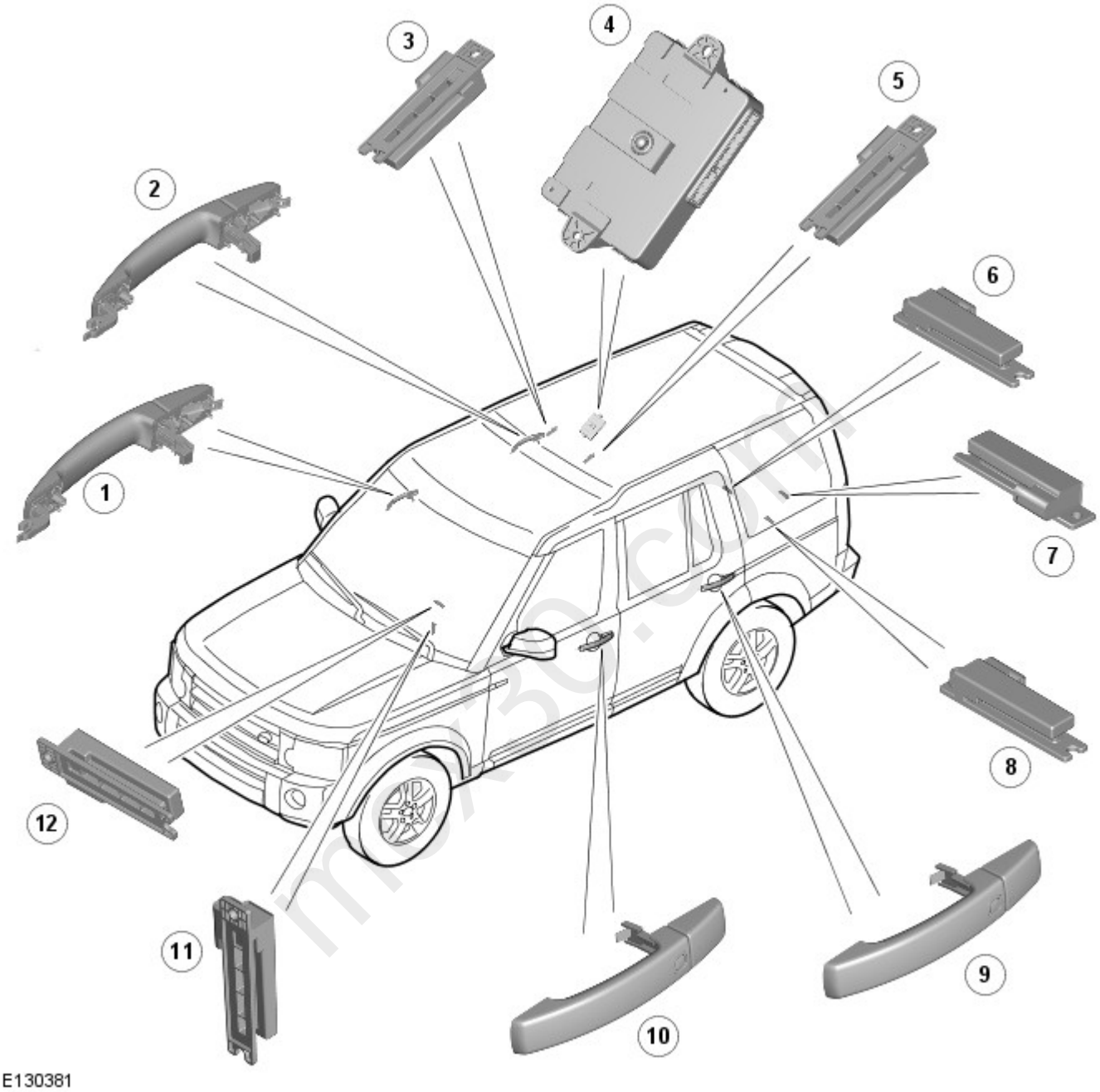

Item	Part Number	Description
1	-	Door Antenna - right-hand-front
2	-	Door Antenna - right-hand-rear
3	-	Interior Antenna – roof lining
4	-	Keyless Vehicle Module
5	-	Interior Antenna – roof lining
6	-	Interior Antenna – luggage compartment
7	-	Bumper Antenna – rear bumper
8	-	Interior Antenna – luggage compartment
9	-	Door Antenna - left-hand-rear
10	-	Door Antenna - left-hand-front
11	-	Interior Antenna – front compartment (passive start only)
12	-	Interior Antenna – front compartment

OVERVIEW

The hinged panels are secured with latches and strikers. A remotely operated central locking system controls the locking

and unlocking of the door and luggage compartment latches.

A radio frequency Smart Key allows the vehicle to be locked and unlocked by pressing the appropriate handset buttons. Two levels of central locking system are available:

- Remote central locking, and an
- optional passive entry.

The passive entry and associated passive start system allows the driver to unlock and start the vehicle without using a vehicle key in a door-lock or ignition switch. The passive entry system is an optional fitment while the passive start system is a standard fitment on all vehicles. The passive start system is combined with the passive anti-theft immobilization system.
For additional information, refer to: Anti-Theft - Passive (419-01B Anti-Theft - Passive, Description and Operation).

Emergency access to the vehicle is provided by a concealed key barrel located in the front left-hand door handle. The key barrel is concealed by a plastic cover which can be removed by inserting the blade of the emergency key into a slot in the cover. The removable emergency key blade is located in the Smart Key.

Operation of the key barrel unlocks the vehicle but does not disarm the alarm system. Locking and unlocking conditions using the emergency key in the door key barrel are:

- If the alarm is not armed the vehicle can be centrally unlocked.
- If the alarm is armed the door only can be opened and the alarm will be triggered.
- The vehicle cannot be double locked or the alarm system armed using the emergency key.

The vehicle can be centrally locked and unlocked from inside using the interior handle release levers on the front doors only. The driver can select locking options, single point entry or drive away locking for example, from a menu available on the touch screen.

Central Locking – Radio Frequency Remote System

The radio frequency central locking system provides locking and unlocking from inside the vehicle and outside within a 20 meter range. The system is operated using buttons on the Smart Key, which transmits radio frequency signals to the radio frequency receiver.

Additional buttons on the Smart Key provide for the convenience operation of the headlamp delay, panic alarm and tailgate release.

Depending on vehicle market, functions offered by the Smart Key include:

- Double locking the doors from outside the vehicle if the lock button on the Smart Key is pressed twice within 3 seconds.
- Drive-away locking - switched on or off by the customer using the vehicle security settings menu available on the touch screen.
- Single or two stage unlocking - single-stage unlocking unlocks all doors with a single press; two-stage unlocking unlocks the driver's door only with a single press and all other doors with a second press.

Changing the unlocking mode between single stage and two-stage also affects the unlocking mode for passive entry (see below). The single or two-stage unlocking function can be switched on or off, as can remote global open or close for the electric windows using the vehicle security settings menu available on the touch screen.

The fuel filler flap is locked by the global locking function. It is not locked by drive-away locking, or if doors are locked from inside the vehicle using the handles.

Actuated from the front door levers only, the doors can be locked from inside the vehicle by pressing the interior door release levers inwards and unlocked by pulling the levers. The touch-screen incorporates a valet mode feature which inhibits access to the glove box while also limiting the use of the touch-screen.

On leaving the vehicle with passive entry the user must press an external button on the door handle once to centrally lock the vehicle or twice within 3 seconds to double lock. The user has a further 3 seconds to pull the door handle to check the vehicle is locked without the Smart Key proximity function unlocking the door again. Pulling the handle after the 3 seconds has lapsed will unlock the door as normal.

If any aperture is not fully closed when the locking process is initiated, either passively or by the Smart Key transmitter, the locking function will be inhibited and an audible error indication will be given. If the ignition is left on an audible warning will be given if the user exits the vehicle, if the user attempts to lock the vehicle (ignition on), another audible indication will be given, and the locking function will be inhibited.

If the door is closed without locking and no key left in the car the ignition will be switched off immediately. If the ignition is left on at any time without starting the vehicle it will switch off automatically after 60 minutes.

If the door is opened by the mechanical key, the full alarm system will sound until the user enters the vehicle and presses either:

- the start/stop button, or
- Smart Key unlock button.

• NOTE: If the KVM (keyless vehicle module) fails to locate the Smart Key, a message 'SMART KEY NOT FOUND REFER TO HANDBOOK' will appear in the instrument cluster message center and the keyless start back-up process will have to be used to mobilize and start the vehicle.

Keyless Start Backup

If the vehicle has been unlocked using the emergency key blade or the Smart Key is not detected by the vehicle, it will be necessary to use the keyless start backup to disarm the alarm and start the engine. The following process must be followed in this event:

- Position the Smart Key against the underside of the fascia, on the outboard side of the steering column, with the buttons facing downwards. This is the location of the IAU (immobilizer antenna unit).
- Holding the Smart Key in position and the brake / clutch pedal depressed, press the start/stop button to start the engine.

Smart Key positioned next to immobilizer antenna unit

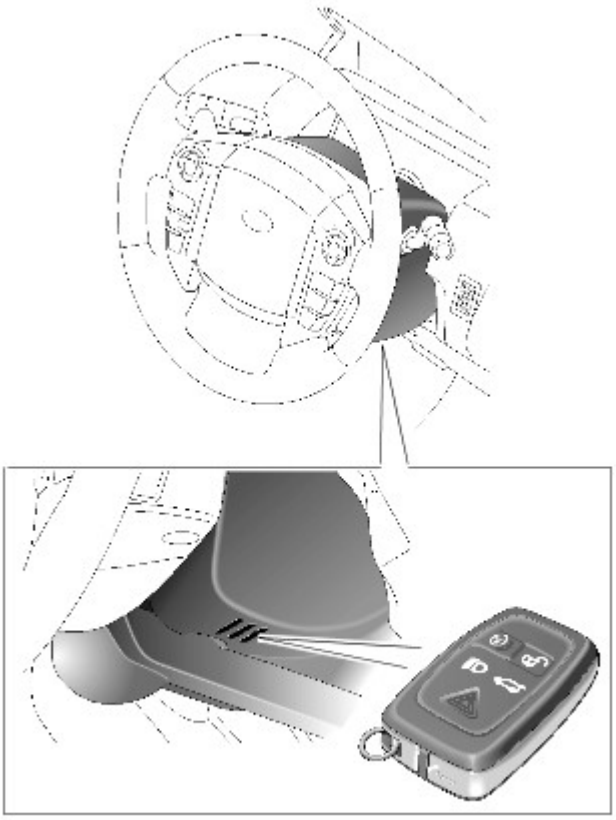

E129977

This process bypasses the data exchange between the KVM and the CJB (central junction box); this is an inductive process and will operate if the battery in the Smart Key is discharged. A transponder within the Smart Key is detected by the IAU. The IAU confirms the code output from the transponder and communicates this code confirmation with the CJB via a LIN (local interconnect network) bus connection. The CJB then initiates the vehicle start process in the normal manner.

PASSIVE ENTRY SYSTEM

The passive entry system is controlled by the KVM and low frequency antennas in each door handle and one in the rear bumper; antennas are also strategically situated within the vehicle. When inside the vehicle, the antennas ensure the Smart Key is always within the active transmission zone of the antennas no matter where the Smart Key is placed inside the vehicle. For this reason the orientation and positioning of the antennas is critical to the correct functioning of the system.

The vehicle can be unlocked without the use of a key-blade or buttons on the Smart Key.

When an external door handle is grasped and the Smart Key is within one meter (3.3ft.) of the handle; the Smart Key receives a low-frequency signal transmitted from the handle.

The Smart Key responds with a radio frequency transmission of its authorization code. The radio frequency signal is received by the Radio-Frequency receiver and passed to the keyless vehicle module which checks and approves the code as valid.

The KVM then drives the fast latch directly to allow the door to be opened. The keyless vehicle module also transmits an unlock request to the CJB. The CJB then passes an unlock request to the door modules.

Door-handle antenna operating area

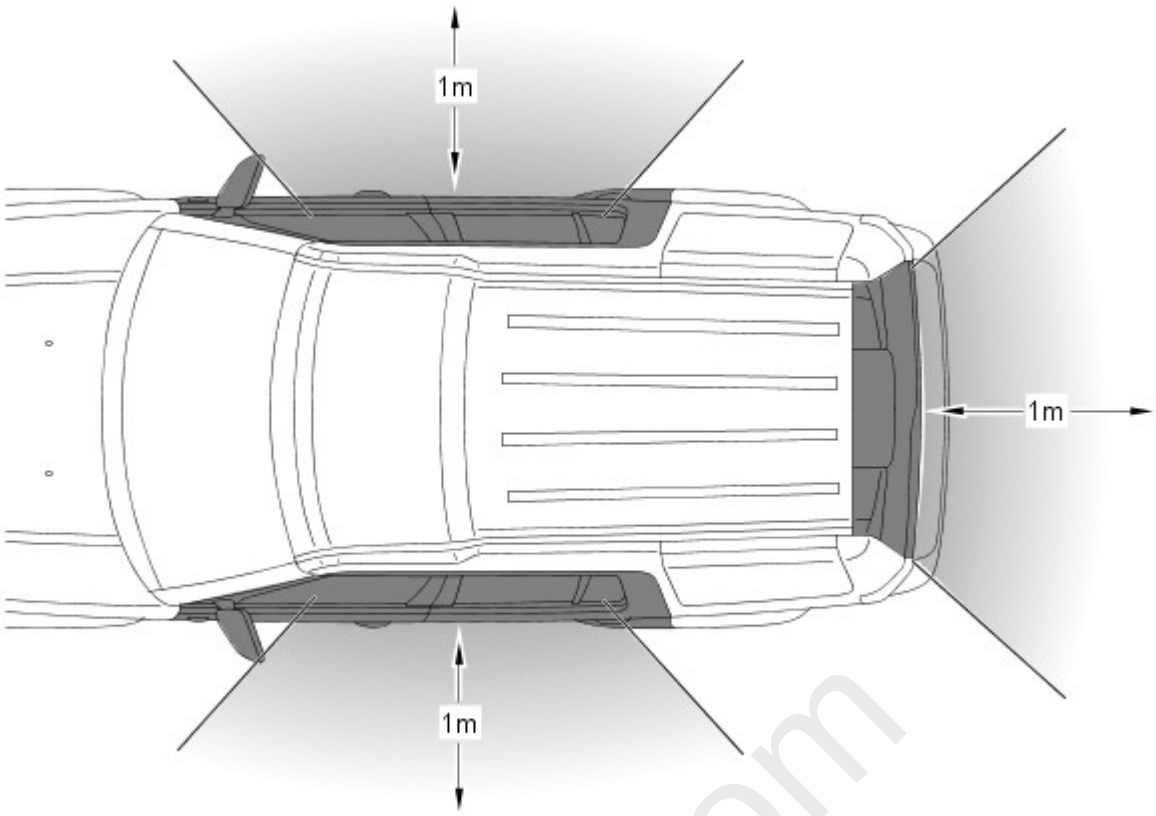

E117707

Locking of the vehicle is performed by pressing one of the buttons located on each exterior door handle, with the Smart Key within a one meter range of the vehicle. When the door handle button is pressed, the KVM transmits a low-frequency signal via the handle antenna to the Smart Key. The Smart Key transmits a radio frequency signal which is verified by the KVM and allows the doors to be locked or double locked and the alarm system to be armed.

To double lock the vehicle, the button on the exterior door handle must be pressed twice within three seconds, with the Smart Key within one meter range of the vehicle. If a door, hood or the tailgate door is ajar when an attempt to lock the vehicle is made, an error tone is emitted and no locking action will occur.
For additional information, refer to: Anti-Theft - Active (419-01A Anti-Theft - Active, Description and Operation).

When unlocking the vehicle using passive entry with single stage unlocking selected and a valid Smart key present, grasping the door handle will centrally unlock the vehicle. When the vehicle is configured for two stage unlocking and the drivers door handle is grasped with a valid Smart Key present only the drivers door will unlock, however if a passenger door handle is grasped with a valid Smart Key present the vehicle will centrally unlock.

• NOTE: Placing the key in a metallic container, a metal briefcase for example, may hinder its operation.

• NOTE: Passive locking will only activate if the key is outside the vehicle. If no key is present, two audible error warnings will sound.

To globally close the vehicle pressing and holding the button on the door handle locks the vehicle, arms the alarm and closes all open windows, not the sunroof. The windows will stop closing when the button is released.

Capacitive Door Handle

The new exterior door operates using the following principle. A capacitive plate is molded internally within the handle, the vehicle exterior body acts as a second capacitive plate; air between the two acts as an insulator. The control electronics within the door handle evaluate the capacitance of the circuit, when a hand interrupts the space between the electrical field is altered and thus the capacitance of the capacitor. This signal is used to trigger the KVM to initiate the unlock process. This signal is calibrated so as not to detect false activations, for example, rain water or soiling.

• NOTE: Extreme water levels can trigger an unlock signal, for example, when washing a locked vehicle with a hose or high powered jet nozzle, providing the key is in the detection zone.

CONTROL DIAGRAM

• NOTE: **A** = Hardwired; **F** = RF transmission; **N** = Medium Speed CAN; **W** = LF transmission; **AH** = Serial Communication Link

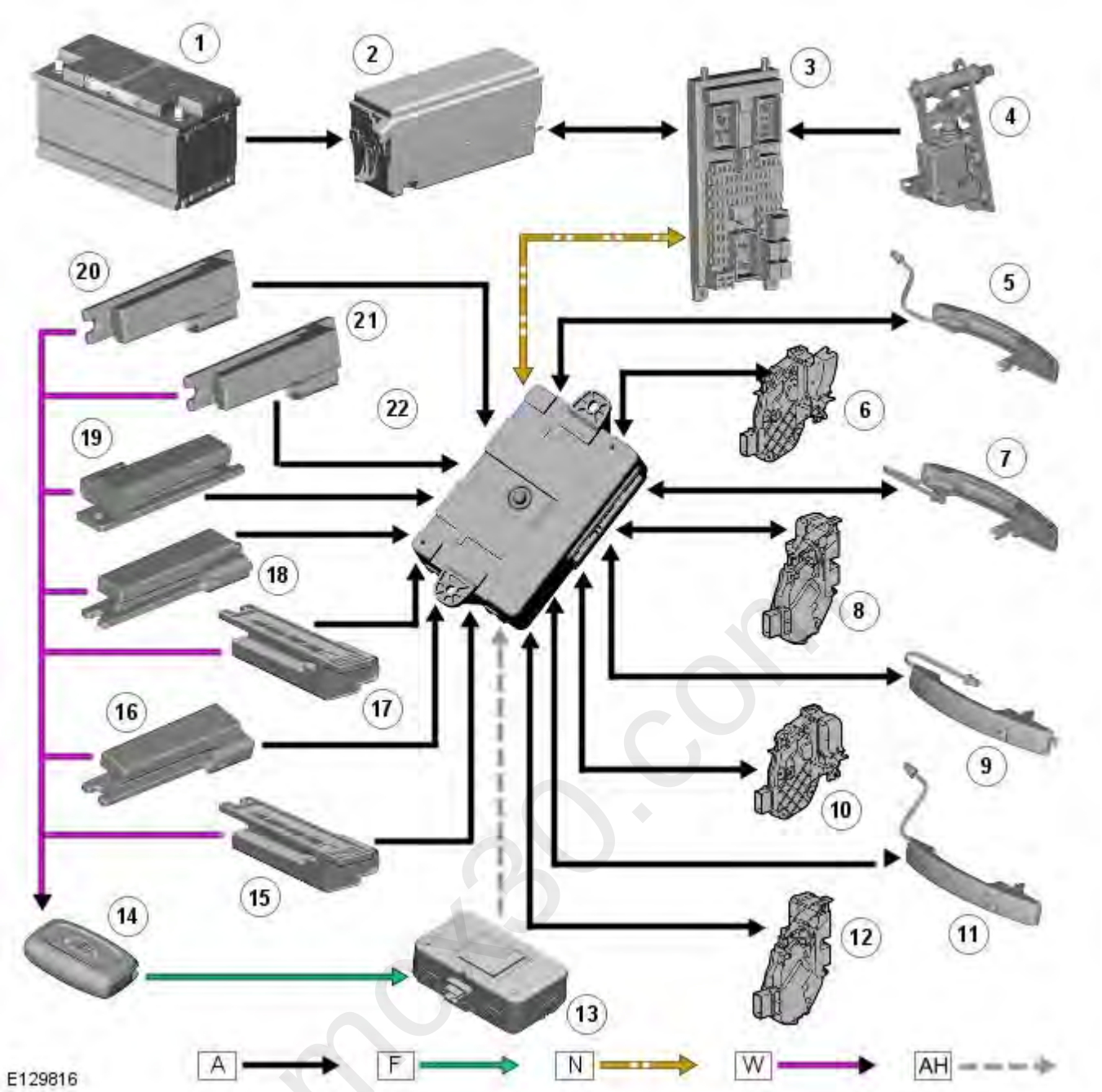

Item	Part Number	Description
1	-	Battery
2	-	EJB (engine junction box)
3	-	CJB
4	-	Tailgate release switch
5	-	Door handle, lock/unlock switch and antenna – right-hand-front
6	-	Door latch and fast latch - right-hand-front
7	-	Door handle, lock/unlock switch and antenna – left-hand-front
8	-	Door latch and fast latch - left-hand-front
9	-	Door handle, lock/unlock switch and antenna – right-hand-rear
10	-	Door latch and fast latch - right-hand-rear
11	-	Door handle, lock/unlock switch and antenna – left-hand-rear
12	-	Door latch and fast latch - left-hand-rear
13	-	Radio frequency receiver
14	-	Smart Key
15	-	Antenna
16	-	Antenna
17	-	Antenna
18	-	Antenna
19	-	Antenna
20	-	Antenna
21	-	Antenna
22	-	Keyless Vehicle Module

PRINCIPLES OF OPERATION

Passive Entry - Locking / Unlocking Process

The vehicle unlocking procedure is carried out in the following way.

With the key within one meter of the approached door and the handle grasped a signal is sent to the KVM which responds with the following simultaneous actions:

- The KVM energizes the low frequency antenna in the door handle which transmits a 125 KHz signal to the key.
- On receipt of the low frequency signal the Smart Key transmits a radio frequency signal '433.92 MHz Europe' '315 MHz NAS / ROW' containing its authorization code to the RF (radio frequency) receiver.
- The RF receiver relays the code, via a serial communication line, to the KVM which checks and approves the code as valid.
  - The KVM will only respond if the radio frequency signal produced is from a valid key for the vehicle.
- The KVM transmits the unlock request to the CJB via the medium-speed CAN (controller area network) bus.
- The CJB confirms and sends the request, via the medium speed CAN bus, to the front door modules.
- The front door modules respond with the following simultaneous actions:
  - Drive the motors to unlock the front doors.
  - Transmit the door unlock request via a LIN (local interconnect network) data signal to the rear door modules.
- The rear door modules drive the motors to unlock the rear doors.
- When the door handle reaches 80 percent of its travel the handle clutch switch is closed and grounded sending a hardwired switched signal to the KVM.
- The KVM drives the fast latch release motors in the door latch assemblies releasing the door latches as the approached door handle is pulled through its full travel, the door can be opened.

mcx30.com

Published: 22-Nov-2011

Handles, Locks, Latches and Entry Systems - Locks, Latches and Entry Systems

Diagnosis and Testing

Principle of Operation

For a detailed description of the locks, latches and entry systems and operation, refer to the relevant Description and Operation section of the workshop manual. REFER to: Handles, Locks, Latches and Entry Systems (501-14 Handles, Locks, Latches and Entry Systems, Description and Operation).

Inspection and Verification

CAUTION: Diagnosis by substitution from a donor vehicle is **NOT** acceptable. Substitution of control modules does not guarantee confirmation of a fault and may also cause additional faults in the vehicle being checked and/or the donor vehicle.

- NOTE: Check and rectify basic faults before beginning diagnostic routines involving pinpoint tests.

1. **1.** Verify the customer concern.
2. **2.** Visually inspect for obvious signs of mechanical or electrical damage.

Visual Inspection

Mechanical	Electrical
• Incorrectly aligned door(s), hood or tailgate • Fuel filler door lock actuator • Hood release handle • Hood release cables • Hood latch(es) • Exterior door handle(s) • Interior door handle(s) • Cable(s) • Tailgate release switch • Rear window release switch	• Fuses • Wiring harness • Wiring connector(s) • Door lock actuator(s) • Remote transmitter (key-fob or smart key) • Central locking switches • Controller Area Network (CAN) circuits • Radio frequency (RF) receiver • Central junction box (CJB) • Loose or corroded connections

3. **3.** If an obvious cause for an observed or reported concern is found, correct the cause (if possible) before proceeding to the next step.
4. **4.** If the cause is not visually evident, verify the symptom and refer to the Symptom Chart, alternatively check for Diagnostic Trouble Codes (DTCs) and refer to the DTC Index.

Symptom Chart

Symptom	Possible causes	Action
Door(s) will not open from outside	• Exterior door handle condition/installation • Exterior release cable disconnected from exterior door handle or door latch • Door latch failure	• Check the exterior door handle condition and installation • Check the condition and security of the exterior release cable • Check the operation of the latch GO to Pinpoint Test A.
Door(s) will not open from inside	• Child lock(s) engaged • Interior door handle condition/installation • Interior release cable disconnected from interior door handle or door latch • Door latch failure	• Check that the child locks are disengaged • Check the interior door handle condition and installation • Check the condition and security of the interior release cable • Check the operation of the latch. GO to Pinpoint Test A.
The message center indicates that the hood, the tailgate or a door is open when it appears to be closed Vehicle indicates a miss-lock when the hood, tailgate and doors appear to be closed	• Incorrect striker alignment/adjustment • Ajar switch circuit short circuit to ground • Ajar switch failure	• Check/adjust the strikers as necessary • Check for DTCs indicating an ajar switch fault. Refer to the DTC index
Fuel flap does not lock/unlock	• Fuel flap cable detached from body • Fuel flap actuator detached from mounting bracket • Fuel flap actuator disconnected • Fuel flap actuator failure	• Check the condition and installation of the fuel flap cable • Check the security of the fuel flap actuator and bracket • Check the security of the actuator electrical connector • Check for DTCs indicating a fuel flap actuator fault. Refer to the DTC index

Symptom	Possible causes	Action
Door latching and locking function test	• Door latch • Cable fault • Door handle • Door lock switch • Wiring harness • Central junction box (CJB)	• NOTE: **Complete the diagnostic steps below to confirm any concern prior replacing the component** • Check for relevant stored DTCs • Once any DTC related faults have been rectified continue with the diagnostic steps below • The first component that should be checked when experiencing locking or latching issues are the door latch release cables, then the door latch. These can be tested as a discrete components to confirm if the specific component is working as designed or is demonstrating a fault • **Single door will not open from the outside (but opens from the inside)**GO to Pinpoint Test A. • **Single Door Will Not Open From The Inside (but opens from the outside)**GO to Pinpoint Test B. • **Door Latching and Locking Function Test**GO to Pinpoint Test C. • **No lock / unlock function from key-fob**GO to Pinpoint Test E.
Latch mounted door ajar switch test	• Door latch • Wiring harness • Instrument cluster	• **Latch Mounted Door Ajar Switch Test**GO to Pinpoint Test D.
Vehicle electrical system test	• Fuses • Wiring harness • Wiring connector(s)	• **Vehicle Electrical System Test**GO to Pinpoint Test E. • Check for relevant stored DTCs • Refer to the electrical circuit diagrams to locate the fault • Carry out continuity test to confirm circuit integrity

DTC Index

For a list of Diagnostic Trouble Codes (DTCs) that could be logged on this vehicle, please refer to Section 100-00.
REFER to: Diagnostic Trouble Code (DTC) Index - DTC: Central Junction Box (CJB) (100-00 General Information, Description and Operation) /
Diagnostic Trouble Code (DTC) Index - DTC: Driver/Passenger Door Module (DDM/PDM) (100-00 General Information, Description and Operation).

Pinpoint Test

PINPOINT TEST A : SINGLE DOOR WILL NOT OPEN FROM THE OUTSIDE (BUT OPENS FROM THE INSIDE)	
TEST CONDITIONS	**DETAILS/RESULTS/ACTIONS**
A1: CHECK THE EXTERIOR DOOR RELEASE CABLE TO EXTERIOR DOOR HANDLE IS INSTALLED CORRECTLY	
	1 Remove the door trim panel as necessary. REFER to: Front Door Trim Panel (501-05 Interior Trim and Ornamentation, Removal and Installation) / Rear Door Trim Panel (501-05 Interior Trim and Ornamentation, Removal and Installation).
	2 Confirm the exterior door release cable is correctly installed to the exterior door handle
	Is the cable correctly installed? **Yes** GO to A2. **No** Connect the door release cable correctly. **If the cable is damaged, install a new door release cable**. Test the system for normal operation.
A2: CHECK THE EXTERIOR DOOR HANDLE RELEASE CONNECTION TO THE DOOR LATCH	
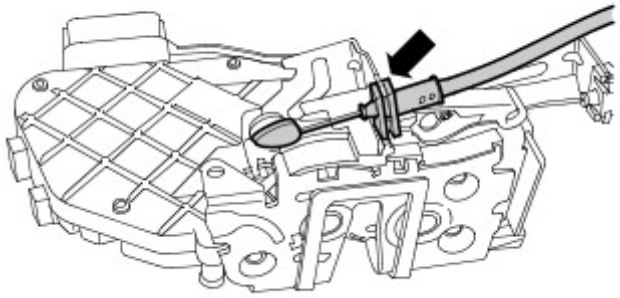 E45779	1 Confirm the exterior door handle release connection to the door latch is installed correctly

mcx30.com

	Is the exterior door handle release cable installed correctly? **Yes** GO to Pinpoint Test C. **No** Connect the door release cable correctly. **If the cable is damaged, install a new door release cable**. Test the system for normal operation.

PINPOINT TEST B : SINGLE DOOR WILL NOT OPEN FROM THE INSIDE (BUT OPENS FROM THE OUTSIDE)	
TEST CONDITIONS	**DETAILS/RESULTS/ACTIONS**
B1: CHECK THE INTERIOR DOOR RELEASE CABLE TO INTERIOR DOOR HANDLE IS INSTALLED CORRECTLY	
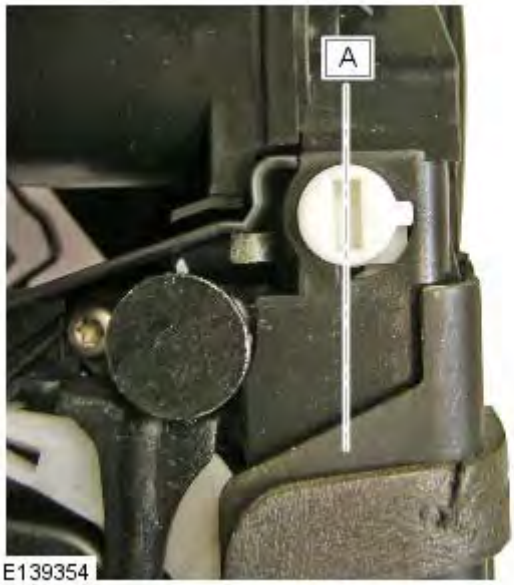	• NOTE: Figure A - Child lock off position shown 1 Make sure the child lock is disengaged (rear door only)
	2 Remove the door trim panel as necessary REFER to: Front Door Trim Panel (501-05 Interior Trim and Ornamentation, Removal and Installation) / Rear Door Trim Panel (501-05 Interior Trim and Ornamentation, Removal and Installation).
	3 Confirm the interior door release cable is correctly installed to the interior door handle
	Is the cable correctly installed? **Yes** GO to B2. **No** Connect the door release cable correctly. **If the cable is damaged, install a new door release cable**. Test the system for normal operation
B2: CHECK THE INTERIOR DOOR HANDLE RELEASE CONNECTION TO THE DOOR LATCH	
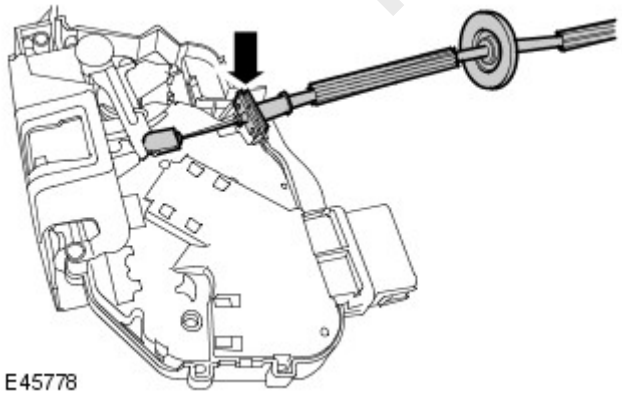	1 Confirm the interior door handle release connection to the door latch is installed correctly
	Is the interior door handle release cable installed correctly? **Yes** GO to Pinpoint Test C. **No** Connect the door release cable correctly. **If the cable is damaged, install a new door release cable**. Test the system for normal operation.

PINPOINT TEST C : DOOR LATCHING AND LOCKING FUNCTION TEST

mcx30.com

TEST CONDITIONS	DETAILS/RESULTS/ACTIONS
C1: DOOR LATCH TEST	
• NOTE: Test as a single component to ensure that the door latch is not replaced unnecessarily, when another component may be at fault	
	1 Remove door trim from door REFER to: Front Door Trim Panel (501-05 Interior Trim and Ornamentation, Removal and Installation) / Rear Door Trim Panel (501-05 Interior Trim and Ornamentation, Removal and Installation).
	2 Remove module plate / closing panel from door
	3 Remove latch module from door REFER to: (501-14 Handles, Locks, Latches and Entry Systems) Front Door Latch (Removal and Installation), Rear Door Latch (Removal and Installation).
	4 Inspect latch module for any visual damage
	5 **Disconnect** interior release bowden cable at door latch
	6 **Disconnect** exterior release bowden cable at door latch
	7 With the latch in hand, connect the electrical connector(s) to connect door latch to door harness
	• NOTE: **THE LATCH IS NOW READY TO TEST** 8 Close all vehicle doors except the door being investigated
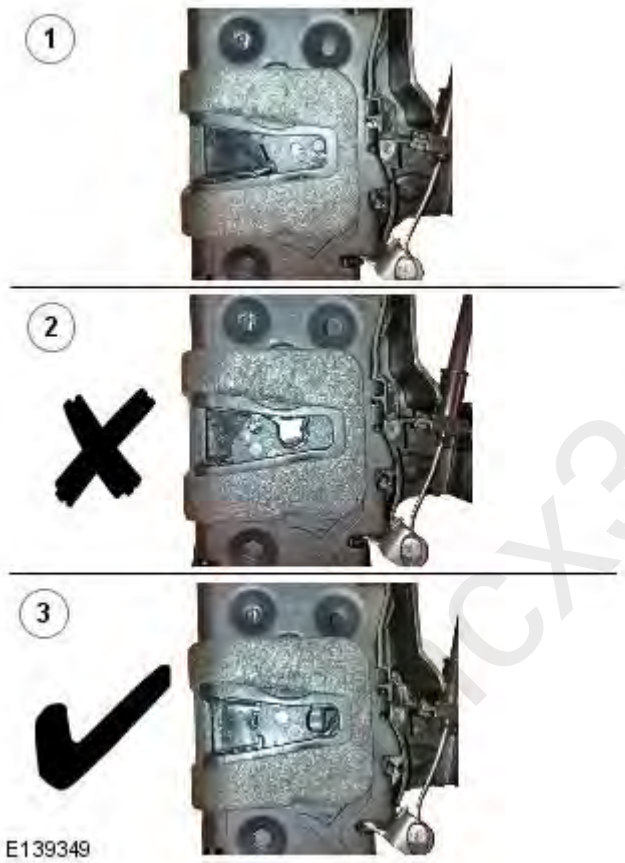	• NOTE: Figure 1 - Unlatched position shown • NOTE: Figure 2 - First safety latched position shown • NOTE: Figure 3 - Fully latched position shown • NOTE: **Test will not work if latch is only in first safety latch position** 9 Rotate latch claw (using a small screw driver or similar) to the fully latched position (Figure 3)

mcx30.com

 E139350	• NOTE: Unlocked position shown 10 Confirm that the latch interior release lever is in the unlocked position as shown
 E139351	• NOTE: Locked position shown 11 Press the **lock** button on the key-fob or smart key
	Does the latch interior release lever move from the unlocked position to the locked position? **Yes** GO to C2. **No** If this is a repeat test and the vehicle electrical test section has been completed and confirmed that vehicle is working correctly, then replace the door latch. If replacing latch as part of a warranty claim, please quote reference code **LKINOP** in the technician comments section of the warranty claim

C2: TEST 1 DOOR LATCH

mx30.com

 E139351	• NOTE: Locked position shown 1 With the latch in the locked state (i.e. the latch interior release lever is in the locked position), press the key-fob or smart key**unlock** button
	Does the latch interior release lever move from the locked position to the unlocked position? **Yes** GO to C3. **No** GO to Pinpoint Test E. If pinpoint test E has been completed and confirmed that vehicle is correctly supplying signals to latch, then replace the door latch. If replacing latch as part of a warranty claim, please quote reference code **UNLKINOP** in the technician comments section of the warranty claim
C3: TEST 2 DOOR LATCH	
 E139352	• NOTE: Fully latched position shown 1 With the latch in its unlocked state, push the latch exterior release lever against its return spring, whilst simultaneously applying a light pressure to release the latch claw using a small screw driver or similar
	Does the latch claw release? **Yes** GO to C4. **No** Repeat tests **C2** and **C3** to confirm the fault. GO to C2. If the repeat test has confirmed that the exterior release lever will not release the claw on an unlocked latch replace the door latch. If replacing latch as part of a warranty claim, please quote reference code **EXTINOP** in the technician comments section of the warranty claim
C4: TEST 3 DOOR LATCH	

- NOTE: Fully latched position shown

1 Using a small screw driver or similar, rotate latch claw to the second fully latched position

- NOTE: Figure A - Child lock off position shown

2 If testing a rear door latch, ensure that the child lock is turned to the off position

3 Confirm that the latch interior release lever is in the unlocked position as shown

mcx30.com

	4 Whilst the latch is still in its unlocked state, push the latch interior release lever against its return spring, whilst simultaneously applying a light pressure to release the latch claw using a small screw driver or similar
	Does the latch claw release **Yes** Latch has passed all tests to confirm its correct function. **DO NOT REPLACE LATCH** as part of any attempts to resolve any locking functionality issues. GO to Pinpoint Test E. To confirm vehicle electrical signal is received by the latch **No** Repeat this testGO to C4. If repeat test has confirmed that the interior release lever will not release the claw when the latch is in the unlocked state, then replace the latch. If replacing latch as part of a warranty claim, please quote reference code **INTINOP** in the technician comments section of the warranty claim

PINPOINT TEST D : LATCH MOUNTED DOOR AJAR SWITCH TEST	
TEST CONDITIONS	**DETAILS/RESULTS/ACTIONS**
D1: TEST 4 DOOR LATCH	
• NOTE: If a customer is complaining of issues relating to a door ajar signal e.g. door latch won't lock, or alarm system triggering (indicated via DTC's), there may be several components that generate the fault, including • Door Latch ajar switch • Alarm control module • Central junction box • Body wiring harness / connectors • Door wiring harness / connectors	
• NOTE: To investigate the functioning of the door ajar switch contained within the door latch, to prove or eliminate the door latch mounted door ajar switch as the root cause, follow the process below. This will prevent the unnecessary replacement of a correctly functioning door latch	
	1 Remove door trim from door REFER to: Front Door Trim Panel (501-05 Interior Trim and Ornamentation, Removal and Installation) / Rear Door Trim Panel (501-05 Interior Trim and Ornamentation, Removal and Installation).
	2 Remove module plate / closing panel from door
	3 Remove latch module from door REFER to: (501-14 Handles, Locks, Latches and Entry Systems) Front Door Latch (Removal and Installation), Rear Door Latch (Removal and Installation).
	4 Inspect latch module for any visual damage

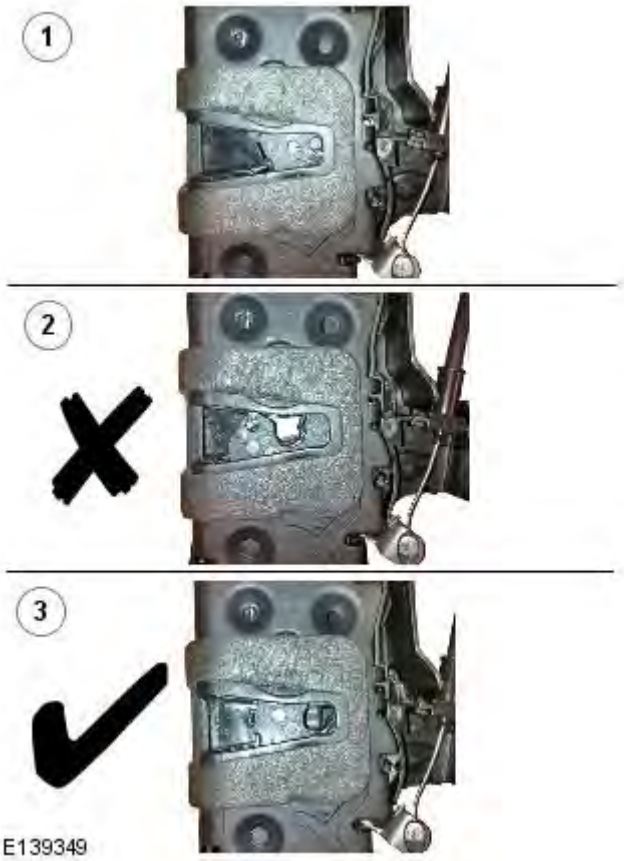	• NOTE: Figure 1 - Unlatched position shown • NOTE: Figure 2 - First safety latched position shown • NOTE: Figure 3 - Fully latched position shown • NOTE: Test will not work if latch is only in first safety latch position **5** Using a small screw driver or similar, rotate latch claw to the second fully latched position (figure 3)
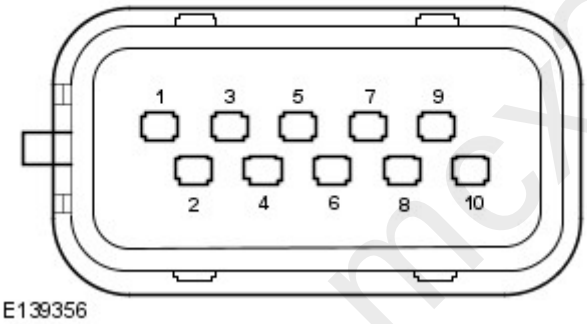	**6** Carry out continuity test between terminals **1 and 4 (left side)** or **8 and 4 (right side)** with claw closed
	Does the continuity test pass? **Yes** The latch ajar switch is working correctly. **Do not replace latch**. Investigate for fault elsewhere in vehicle system **No** Release latch claw and repeat test from step 5 to confirm result. If this is a repeat test and you are sure that the ajar switch does not provide continuity when fully latched. Replace the latch. If replacing latch as part of a warranty claim, please quote reference code **AJARINOP** in the technician comments section of the warranty claim

PINPOINT TEST E : VEHICLE ELECTRICAL SYSTEM TEST	
TEST CONDITIONS	**DETAILS/RESULTS/ACTIONS**
E1: TEST 5 LOCK COMMAND	

mcx30.com

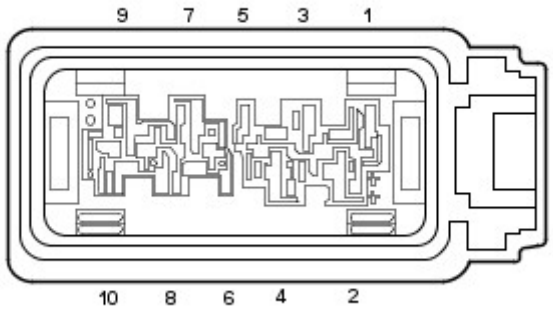 E139357	1 Disconnect electrical connector from latch
	2 Close all vehicle doors apart from door being investigated, please note which door, left side or right side is under investigation
	3 Monitor the circuit for momentary power when locking the vehicle via the key-fob or smart key between terminals **1 and 10 left side** or **8 and 10 right side**
	Is there momentary power (for approx 8 seconds) between terminals **1 and 10 left side** or **8 and 10 right side** when locking the vehicle via the key-fob or smart key **Yes** The vehicle electrical system is locking correctly, providing the signal to the latch. GO to E2. **No** Refer to the electrical circuit diagrams and investigate why vehicle electrical system is not providing signals to the latch. Using the manufacturer approved diagnostic system check for logged DTCs to localize the fault
E2: TEST 6 UNLOCK COMMAND	
	1 Monitor the circuit for momentary power when unlocking the vehicle via the key-fob or smart key between terminals **1 and 9 left side** or **8 and 9 right side**
	Is there momentary power (for approx 8 seconds) between terminals **1 and 9 left side** and **8 and 9 right side** when unlocking the vehicle via the key-fob or smart key **Yes** The vehicle electrical system is unlocking correctly, providing the signal to the latch. Plug electrical connector back in to latch. Rebuild vehicle and check for correct operation **No** Refer to the electrical circuit diagrams and investigate why vehicle electrical system is not providing signals to the latch. Using the manufacturer approved diagnostic system check for logged DTCs to localize the fault

mcx3e.com

Published: 11-May-2011

Handles, Locks, Latches and Entry Systems - Tailgate Striker Adjustment

General Procedures

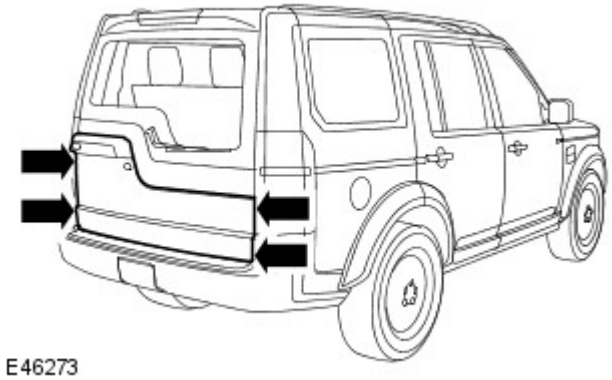

1. Check for an equal gap and alignment to the adjacent panels. If incorrect, follow the adjust procedure below.

2. Remove the tailgate striker trim panel.
3. Loosen the 2 tailgate striker bolts.

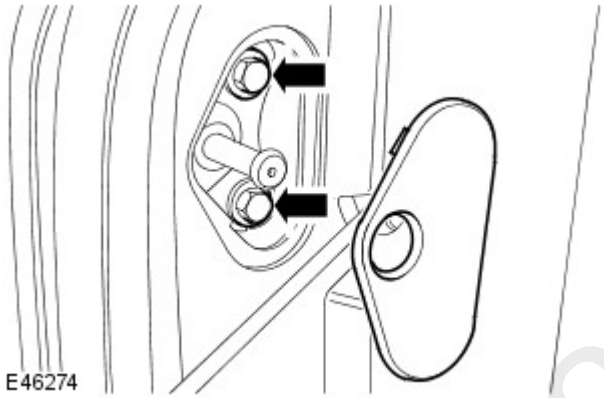

4. Close the tailgate and check for an equal gap and alignment to the adjacent panels.
5. Open the tailgate and tighten the tailgate striker bolts to 25 Nm (18 lb.ft).
6. Install the tailgate striker trim panel.

mcx30.com

Published: 11-May-2011

Handles, Locks, Latches and Entry Systems - Liftgate Striker Adjustment

General Procedures

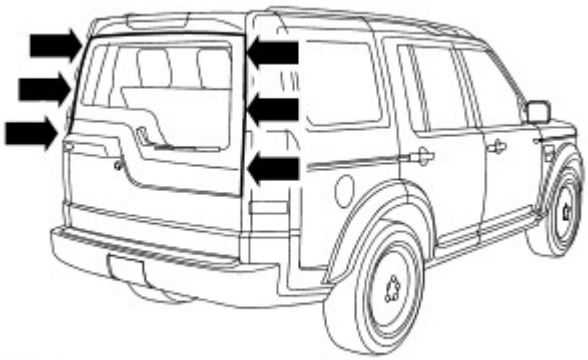

E45607

1. Check for an equal gap and alignment to the adjacent panels. If incorrect, follow the adjust procedure below.

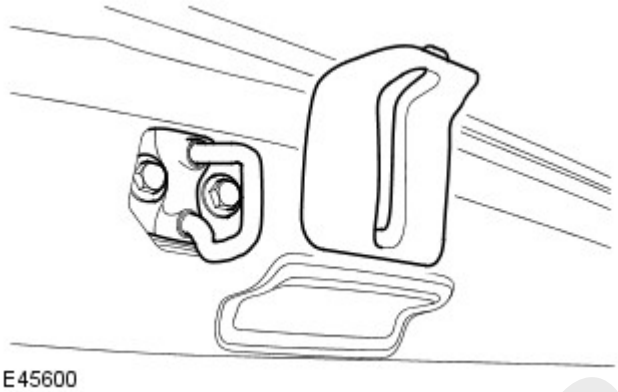

E45600

2. Remove the liftgate striker trim panel.
3. Loosen the 2 liftgate striker bolts.
4. Close the liftgate and check for an equal gap and alignment to the adjacent panels.
5. Open the liftgate and tighten the liftgate striker bolts to 25 Nm (18 lb.ft).
6. Install the liftgate striker trim panel.

mcx30.com

Published: 11-May-2011

Handles, Locks, Latches and Entry Systems - Ignition Lock Cylinder

Removal and Installation

Removal

• NOTE: This procedure is for removal and installation of the ignition lock cylinder. The ignition lock and door lock cylinders are replaced in sets.

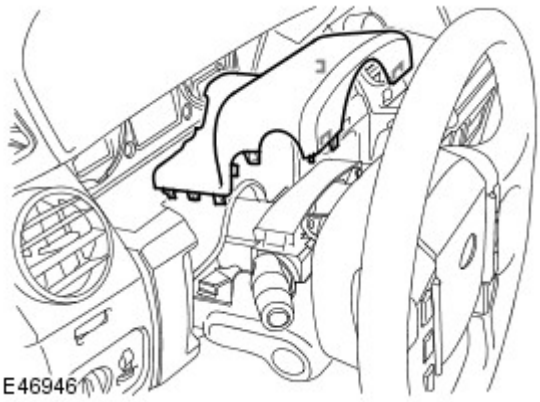

1. Fully extend the steering column for access.
2. Remove the steering column upper shroud.
   - Release the 4 clips.

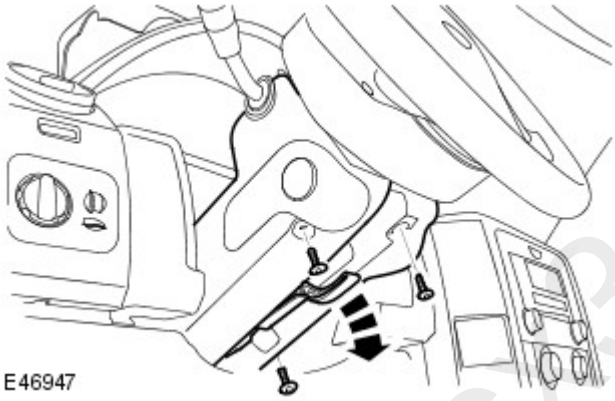

3. Remove the steering column lower shroud.
   - Remove the 3 Torx screws.
   - Release the steering column adjustment lever.
4. Remove the passive coil.
   - Disconnect the electrical connector.
   - Release the 2 clips.
5. Remove the ignition lock cylinder.
   - Turn the ignition key to position 1.
   - Insert a pin, not exceeding 2 mm diameter, through the access hole in the ignition lock cylinder housing to depress the plunger, and release the ignition lock cylinder.

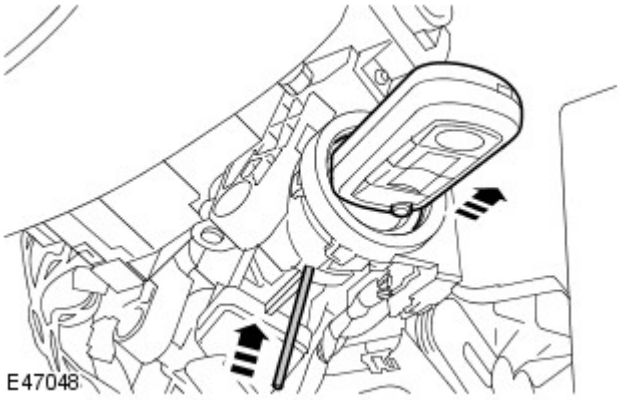

Installation

mc230.com

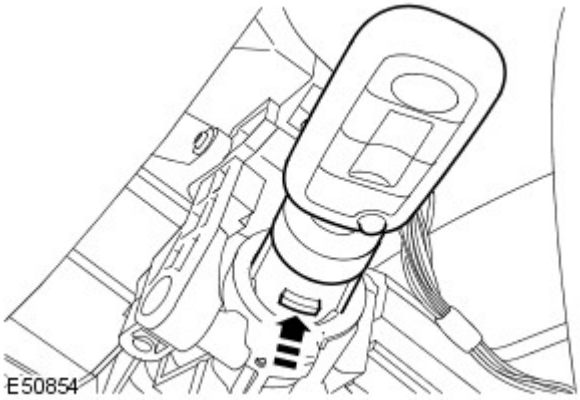

1. Install the ignition lock cylinder.

- Turn the ignition key to position 1.
- Locate into guides and depress the plunger.

2. Install the passive coil.

- Secure the clips.
- Connect the electrical connector.

3. Install the steering column shrouds.

- Tighten the Torx screws.
- Secure the clips.
- Secure the adjustment lever.

mcx30.com

Published: 11-May-2011

Handles, Locks, Latches and Entry Systems - Hood Latch Release Handle

Removal and Installation

Removal

1. Remove the cowl side trim panel.
   For additional information, refer to: Cowl Side Trim Panel (501-05 Interior Trim and Ornamentation, Removal and Installation).
2. Disconnect the hood release cable from the connecting box.
   - Open the connecting box cover.

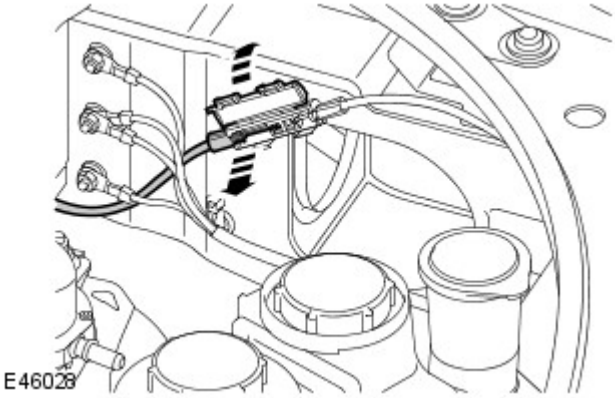

3. Remove the hood release lever housing.
   - Remove the bolt.
   - Disconnect the hood release cable.

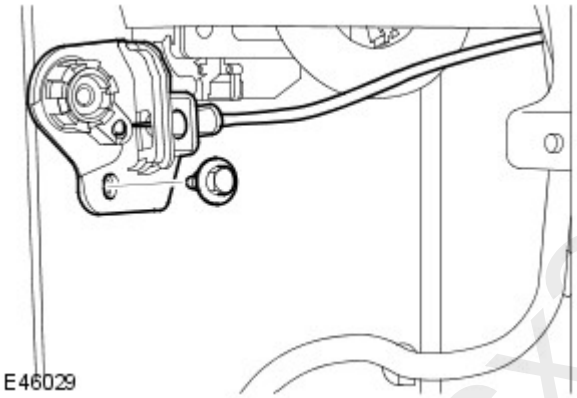

Installation

1. Install the hood release lever housing.
   - Connect the hood release cable.
   - Tighten the bolt to 5 Nm (3.7 lb.ft).
2. Attach the hood release cable to the connecting box.
   - Close the connecting box cover.
3. Install the cowl side trim panel.
   For additional information, refer to: Cowl Side Trim Panel (501-05 Interior Trim and Ornamentation, Removal and Installation).

mcx30.com

Published: 11-May-2011

Handles, Locks, Latches and Entry Systems - Front Door Latch

Removal and Installation

Removal

1. Remove the window motor and regulator assembly.
   For additional information, refer to: Front Door Window Regulator and Motor (501-11, Removal and Installation).

2. CAUTION: Release the exterior door handle and screw cover clips from inside the door.

   Remove the front door exterior handle.
   For additional information, refer to: Exterior Front Door Handle (501-14 Handles, Locks, Latches and Entry Systems, Removal and Installation).

3. Release the remote control cable.
   - Release the grommet.

4. Release the door exterior handle mechanism.
   - Remove the adhesive tape from the access hole.
   - Remove the Torx screw.
   - Remove the locking pin.

5. Remove the front door latch assembly.
   - Disconnect the electrical connector.
   - Remove the 3 Torx screws.

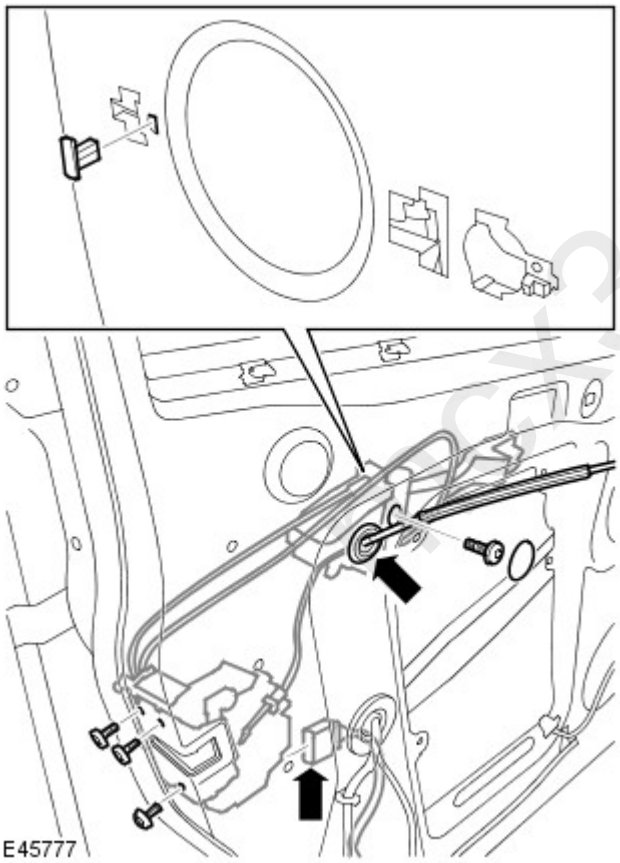

cx30.com

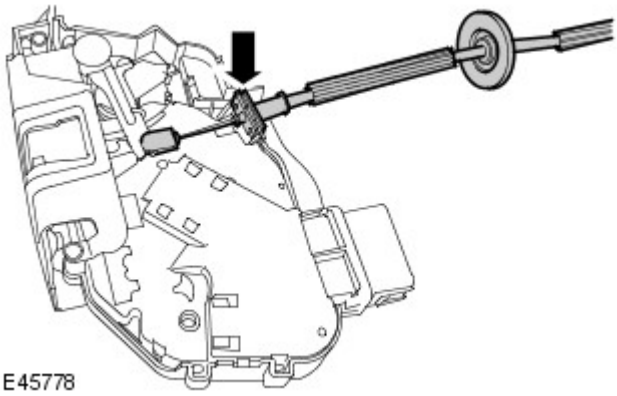

E45778

6. NOTE: Do not disassemble further if the component is removed for access only.

Remove the door latch remote control cable.

- Release the cable from the abutment bracket.
- Remove the cable from the lever.

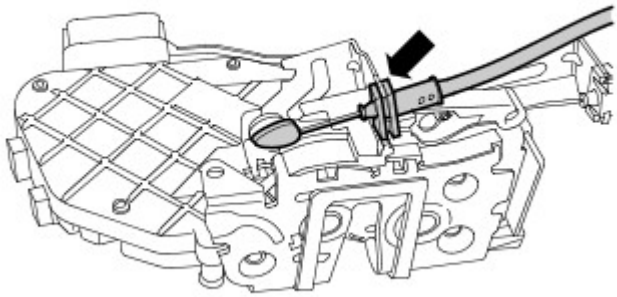

E45779

7. Release the exterior door handle mechanism cable from the door latch.

- Release the cable from the abutment bracket.
- Remove the cable from the lever.

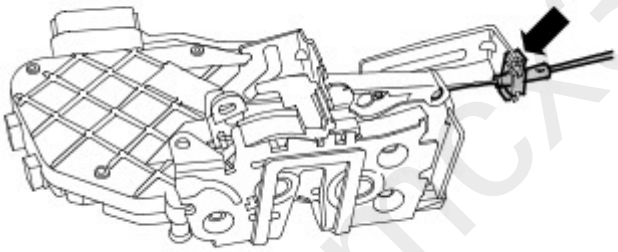

E45780

8. LH side: Release the door lock cylinder cable from the door latch.

- Release the cable from the abutment bracket.
- Remove the cable from the lever.

mcx30.com

Installation

1. LH side: Connect the door lock cylinder cable to the door latch.

- Connect the cable to the lever.
- Secure the cable to the abutment bracket.

2. Connect the door exterior handle mechanism cable to the door latch.

- Connect the cable to the lever.
- Secure the cable to the abutment bracket.

3. Install the remote control cable to the door latch.

- Connect the cable to the lever.
- Secure the cable to the abutment bracket.

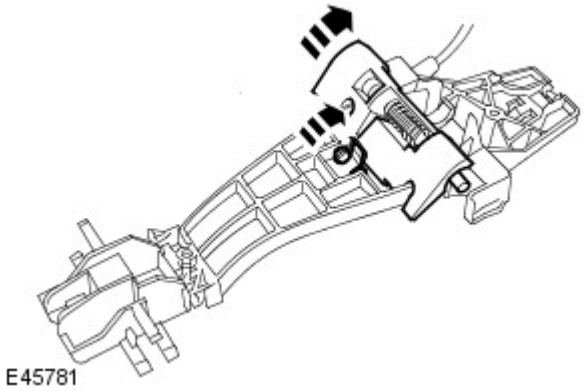

4. Set the exterior handle mechanism.

- Rotate the lever.
- Engage the retaining tang.

5. Install the front door latch assembly.

- Tighten the Torx screws to 10 Nm (7 lb.ft).
- Connect the electrical connector.

6. Install the door exterior handle mechanism.

- Position the mechanism to the door.
- Fit the locking pin.
- Fit and tighten the Torx screw.

7. LH side: Position the control cables into the retainers.

8. Position the remote control cable to the door.

- Install the grommet.

9. Install the front door exterior handle.
For additional information, refer to: Exterior Front Door Handle (501-14 Handles, Locks, Latches and Entry Systems, Removal and Installation).

10. Install the window motor and regulator assembly.
For additional information, refer to: Front Door Window Regulator and Motor (501-11, Removal and Installation).

mcx30.com

Handles, Locks, Latches and Entry Systems - Rear Door Latch

Removal and Installation

Removal

1. Remove the rear door window motor and regulator assembly.
   For additional information, refer to: Rear Door Window Regulator and Motor (501-11 Glass, Frames and Mechanisms, Removal and Installation).

2. CAUTION: Release the exterior door handle and screw cover clips from inside the door.

   Remove the rear door exterior handle.
   For additional information, refer to: Exterior Rear Door Handle (501-14 Handles, Locks, Latches and Entry Systems, Removal and Installation).

3. Release the remote control cable.
   - Release the grommet.

4. Release the door exterior handle mechanism.
   - Remove the 2 Torx screws.
   - Remove the locking pin.

5. Remove the rear door latch assembly.
   - Disconnect the electrical connector.
   - Remove the 3 Torx screws.

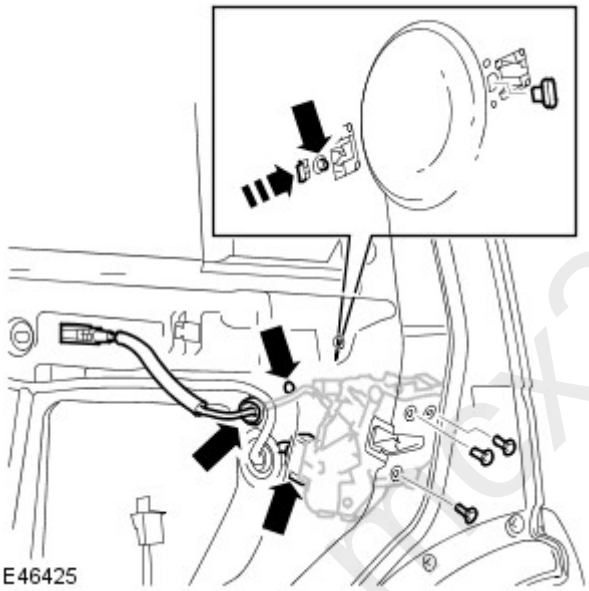

6. NOTE: Do not disassemble further if the component is removed for access only.

   Remove the door latch remote control cable.
   - Release the cable from the abutment bracket.
   - Remove the cable from the lever.

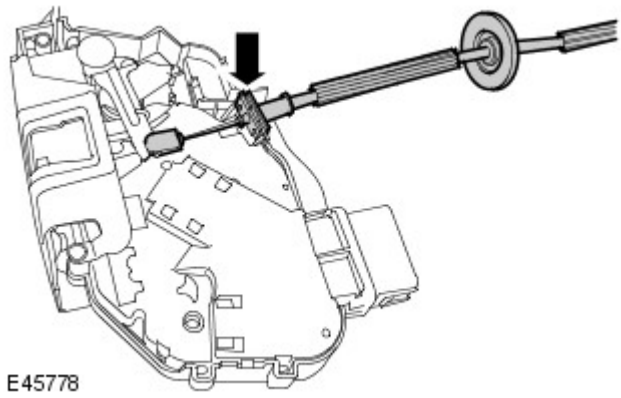

mex30.com

7. Release the exterior door handle mechanism cable from the door latch.
   - Release the cable from the abutment bracket.
   - Remove the cable from the lever.

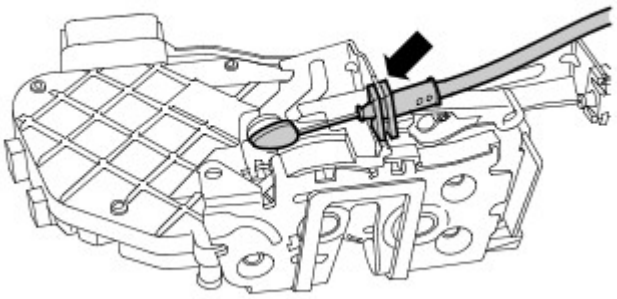
E45779

Installation

1. Connect the door exterior handle mechanism cable to the door latch.
   - Connect the cable to the lever.
   - Secure the cable to the abutment bracket.
2. Install the remote control cable to the door latch.
   - Connect the cable to the lever.
   - Secure the cable to the abutment bracket.
3. Set the exterior handle mechanism.
   - Rotate the lever.
   - Engage the retaining tang.

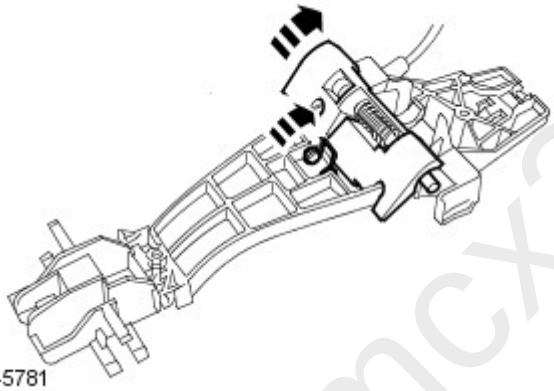
E45781

4. Install the rear door latch assembly.
   - Tighten the Torx screws to 10 Nm (7 lb.ft).
   - Connect the electrical connector.
5. Install the door exterior handle mechanism.
   - Position the mechanism to the door.
   - Fit the locking pin.
   - Install and tighten the Torx screws.
6. Position the remote control cable to the door.
   - Install the grommet.
7. Install the rear door exterior handle.
   For additional information, refer to: Exterior Rear Door Handle (501-14 Handles, Locks, Latches and Entry Systems, Removal and Installation).
8. Install the rear door window motor and regulator assembly.
   For additional information, refer to: Rear Door Window Regulator and Motor (501-11 Glass, Frames and Mechanisms, Removal and Installation).

mcx30.com

mcx30.com

Published: 20-Jun-2011

Handles, Locks, Latches and Entry Systems - Liftgate Latch

Removal and Installation

Removal

1. Remove the tailgate trim panel.
   For additional information, refer to: Tailgate Trim Panel (501-05 Interior Trim and Ornamentation, Removal and Installation).
2. Remove the tailgate water shedder.
3. Release the liftgate latch.
   - Remove the 3 Torx screws.

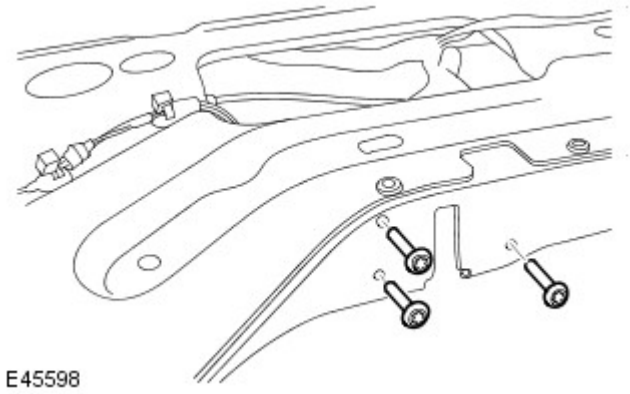

E45598

4. Remove the liftgate latch.
   - Disconnect the electrical connector.
   - Release the liftgate latch to actuator cable.

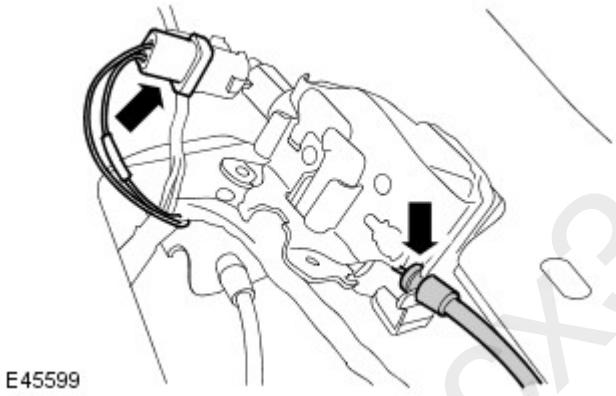

E45599

mox30.com

Installation

1. Install the liftgate latch.
   - Attach the liftgate latch to actuator cable.
   - Connect the electrical connector.
   - Tighten the Torx screws to 10 Nm (7 lb.ft).
2. Install the tailgate water shedder.
3. Install the tailgate trim panel.
   For additional information, refer to: Tailgate Trim Panel (501-05 Interior Trim and Ornamentation, Removal and Installation).
4. Adjust the liftgate striker.
   For additional information, refer to: Liftgate Striker Adjustment (501-14 Handles, Locks, Latches and Entry Systems, General Procedures).

Published: 11-May-2011

Handles, Locks, Latches and Entry Systems - Door Lock Cylinder

Removal and Installation

Removal

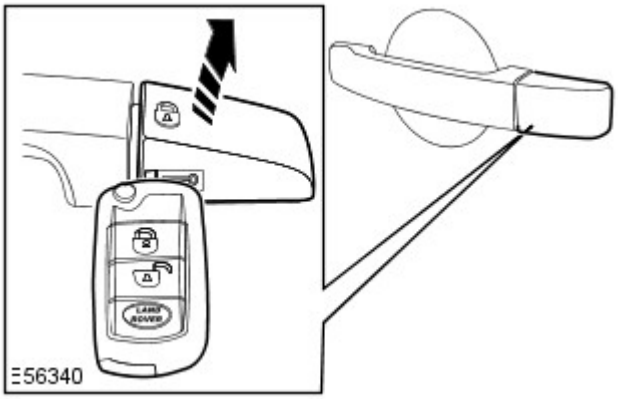

1. Remove the front door lock cylinder cover.

- Use the ignition key.

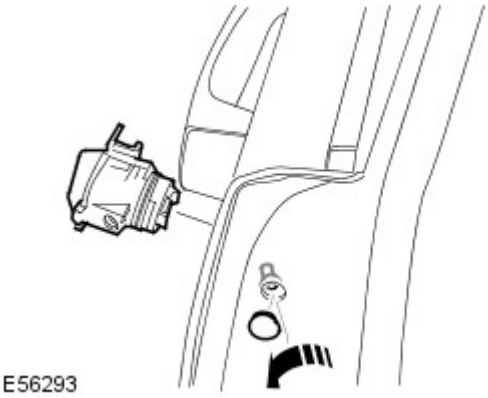

2. NOTE: The Torx screw remains in the door lock housing.

Remove the front door lock cylinder.

- Open the door.
- Remove the access plug.
- Loosen the Torx screw to release the lock.

Installation

1. To install, reverse the removal procedure.

mcx30.com

Published: 11-May-2011

Handles, Locks, Latches and Entry Systems - Tailgate Latch

Removal and Installation

Removal

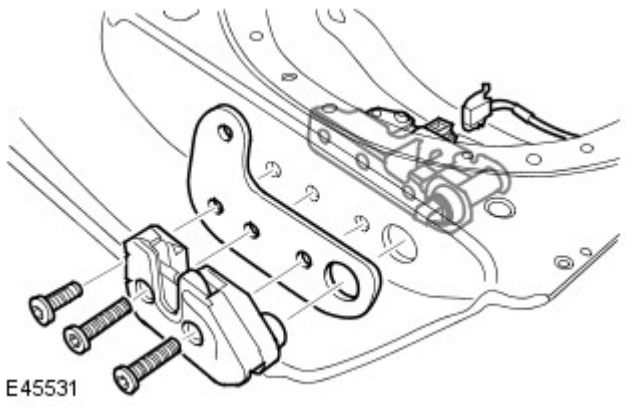

1. Remove the tailgate speaker assembly.
   For additional information, refer to: Tailgate Speaker (415-03 Speakers, Removal and Installation).
2. Remove the tailgate latch assembly.
   - Remove the 3 Torx bolts.
   - Disconnect the electrical connector.
   - Remove the latch.
   - Remove the latch plate.
   - Remove the latch actuator assembly.

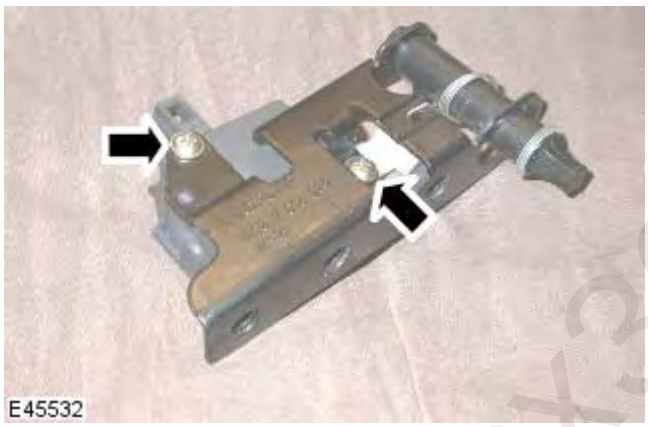

3. NOTE: Do not disassemble further if the component is removed for access only.

   Remove the latch actuator.
   - Remove the 2 screws.

Installation

1. Install the latch actuator.
   - Tighten the screws.
2. Install the tailgate latch assembly.
   - Install the latch actuator assembly.
   - Install the latch plate.
   - Install the latch.
   - Tighten the Torx screws to 25 Nm (18 lb.ft).
   - Connect the electrical connector.
3. Install the tailgate speaker assembly.
   For additional information, refer to: Tailgate Speaker (415-03 Speakers, Removal and Installation).
4. Adjust both the tailgate strikers.
   For additional information, refer to: Tailgate Striker Adjustment (501-14 Handles, Locks, Latches and Entry Systems, General Procedures).

mcx30.com

Published: 11-May-2011

Handles, Locks, Latches and Entry Systems - Exterior Front Door Handle

Removal and Installation

Removal

• NOTE: This procedure details removal and installation of both the LH and RH exterior front door handles.

• NOTE: If the exterior handle is to be removed in conjunction with additional door internal items, then it is recommended that the exterior handle and screw cover be released from the inside of the door, after removal of the door trim pad, regulator and motor.

1. NOTE: Vehicles with passive entry system.

Remove the window regulator assembly.
For additional information, refer to: Front Door Window Regulator and Motor (501-11, Removal and Installation).

2. Disconnect the electrical connector.

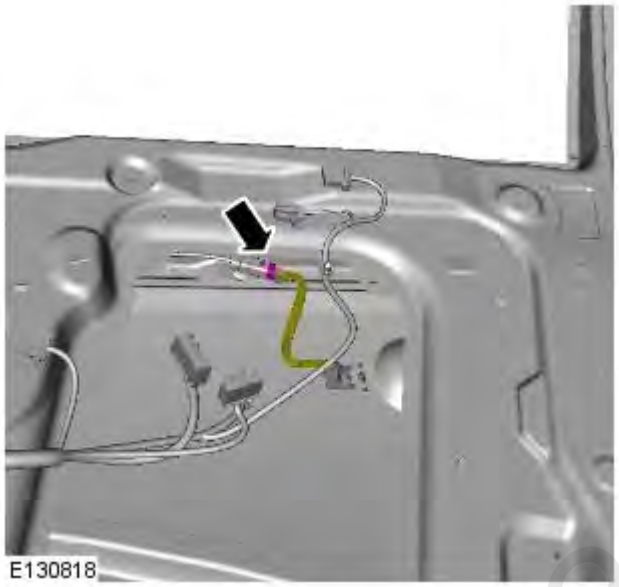

3. NOTE: All vehicles.

LH side: Remove the private lock.
For additional information, refer to: Door Lock Cylinder (501-14 Handles, Locks, Latches and Entry Systems, Removal and Installation).

4. NOTE: Removal of the screw cover may break the retaining clips.

• NOTE: If the screw cover is to be removed in conjunction with additional door internal items, then it is recommended that the screw cover be released from the inside of the door, after removal of the door trim pad, regulator and motor.

RH side: Remove the screw cover.

- Release the 2 clips.

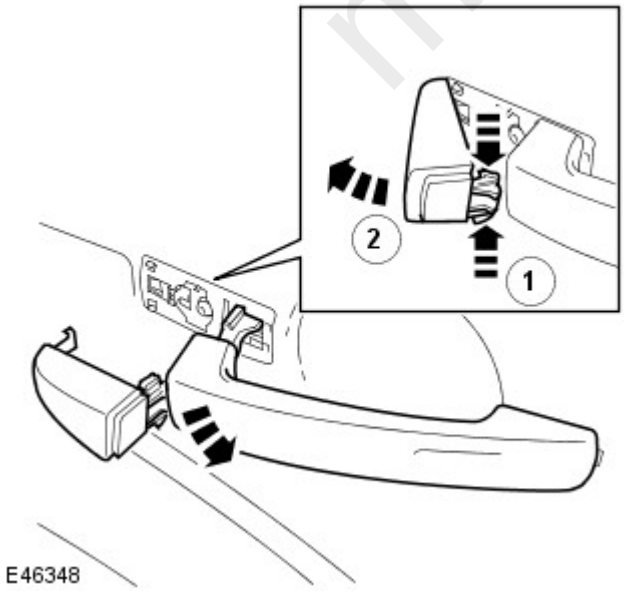

mcx30.com

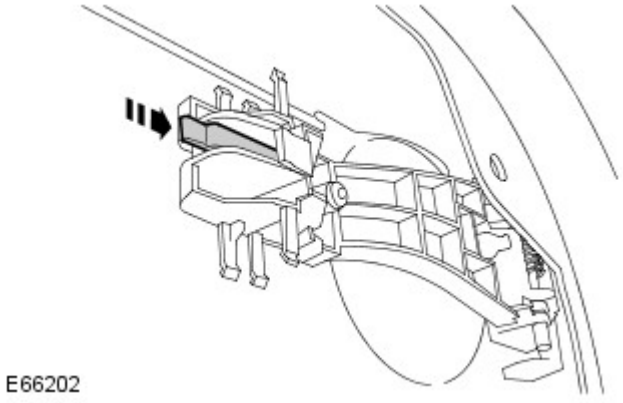

5. To remove the exterior front door handle, after removal of the door trim pad and regulator.

- Using a nylon mallet, carefully release the clip.
- Remove the 2 gaskets.

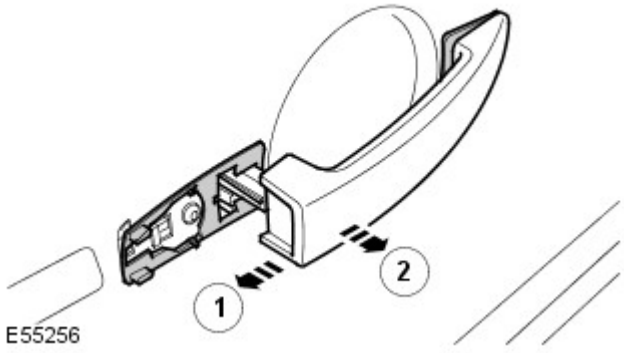

6. NOTE: Vehicles without passive entry system.

To remove the exterior front door handle, without removal of the door trim pad.

- Slide the handle firmly rearward, then pivot the handle away from the door to remove it.
- Remove the 2 gaskets.

Installation

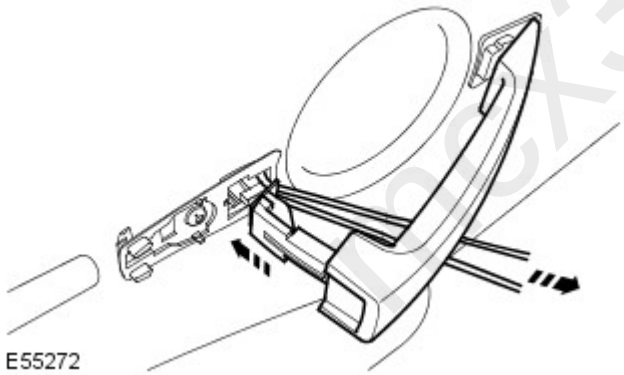

1. NOTE: Use a length of cord to hold the lock lever against spring pressure while engaging the outside handle.

To install, reverse the removal procedure.

mecx30.com

Published: 11-May-2011

Handles, Locks, Latches and Entry Systems - Exterior Rear Door Handle

Removal and Installation

Removal

• NOTE: If the exterior handle is to be removed in conjunction with additional door internal items, then it is recommended that the exterior handle and screw cover be released from the inside of the door, after removal of the door trim pad, regulator and motor.

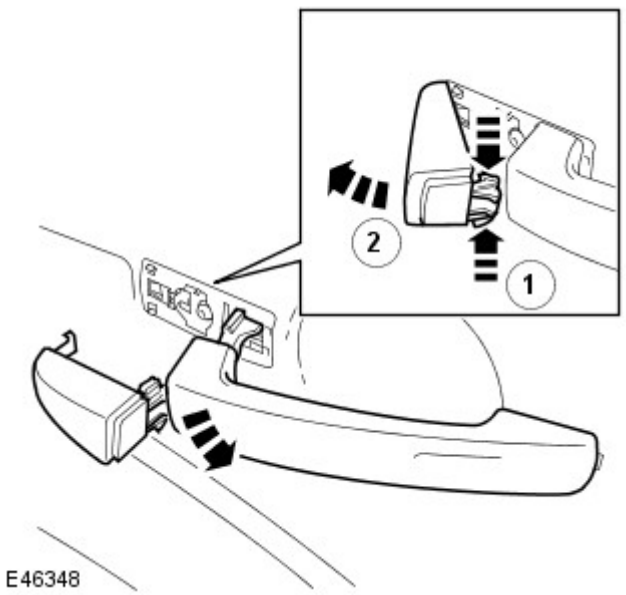

1. NOTE: Removal of the screw cover may break the retaining clips.

• NOTE: If the screw cover is to be removed in conjunction with additional door internal items, then it is recommended that the screw cover be released from the inside of the door, after removal of the door trim pad, regulator and motor.

Remove the screw cover.

- Release the 2 clips.

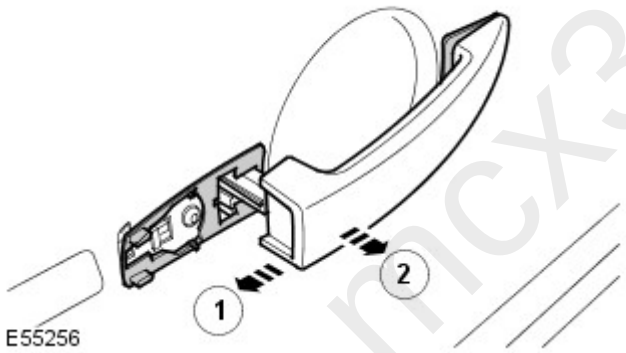

2. To remove the exterior rear door handle, without removal of the door trim pad.

- Slide the handle firmly rearward, then pivot the handle away from the door to remove it.
- Remove the 2 gaskets.

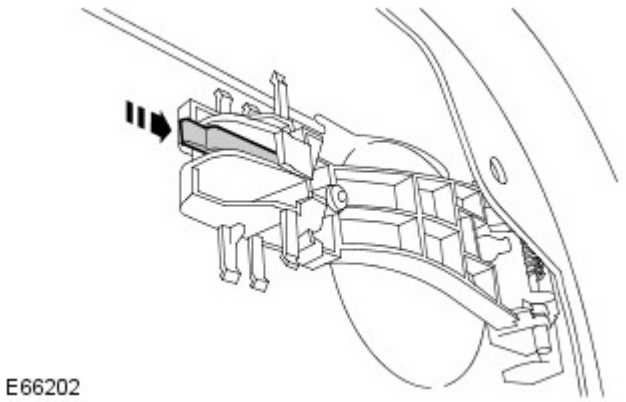

3. To remove the exterior rear door handle, after removal of the door trim pad and regulator.

- Using a nylon mallet, carefully release the clip.
- Remove the 2 gaskets.

Installation

mcx30.com

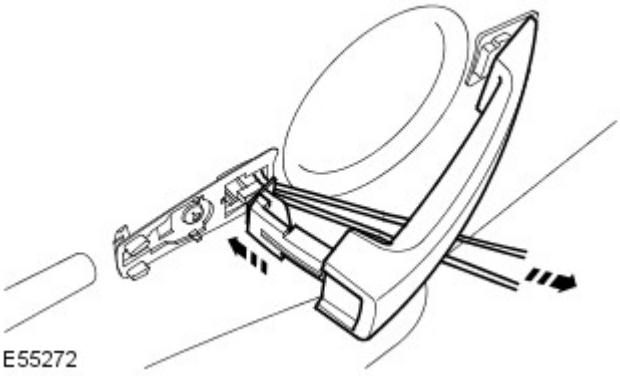

1. NOTE: Use a length of cord to hold the lock lever against spring pressure while engaging the outside handle.

To install, reverse the removal procedure.

mcx30.com

Published: 11-May-2011

Handles, Locks, Latches and Entry Systems - Liftgate Latch Actuator

Removal and Installation

Removal

1. Remove the tailgate trim panel.
   For additional information, refer to: Tailgate Trim Panel (501-05 Interior Trim and Ornamentation, Removal and Installation).
2. Release the liftgate actuator.
   - Loosen the 2 bolts.
   - Disconnect the electrical connector.

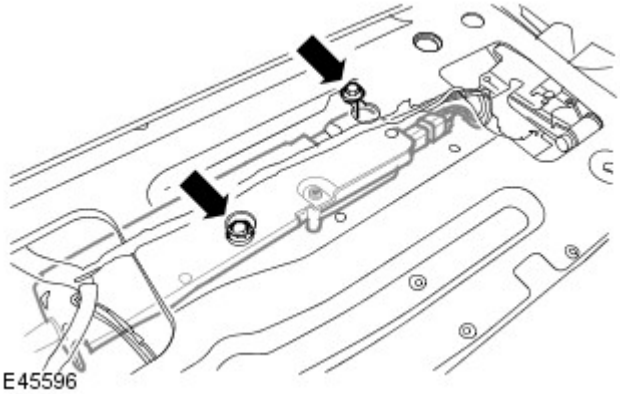

3. Remove the actuator cover.
   - Remove the 2 Torx screws.

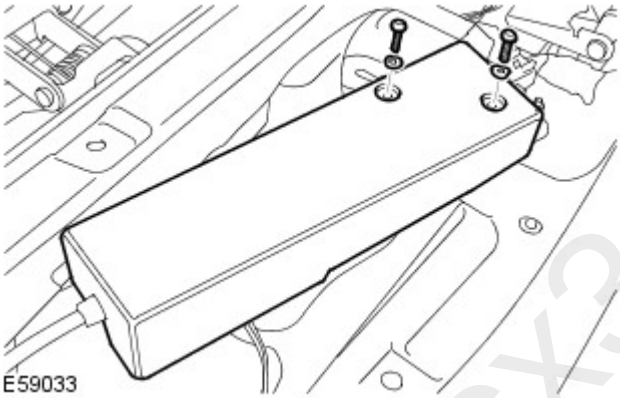

4. Remove the liftgate actuator.
   - Release the liftgate latch to actuator cable.

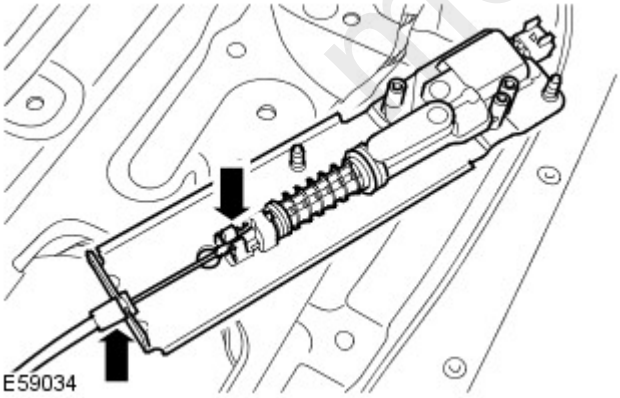

Installation

mcx30.com

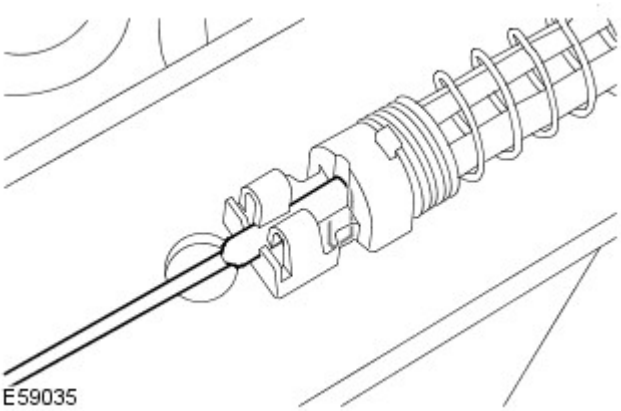

1. CAUTION: It is possible to incorrectly install the cable, ensure the ferrule and clip are fully engaged.

Attach the actuator to the liftgate latch cable.

2. Install the cover.

- Tighten the Torx screws.

3. Install the liftgate actuator.

- Tighten the bolts to 10 Nm (7 lb.ft).
- Connect and secure the electrical connector.

4. Install the tailgate trim panel.
For additional information, refer to: Tailgate Trim Panel (501-05 Interior Trim and Ornamentation, Removal and Installation).

mcx30.com